SERVICE MANUAL

INTEGRATED STEREO AMPLIFIER

SANSUI AU-D9

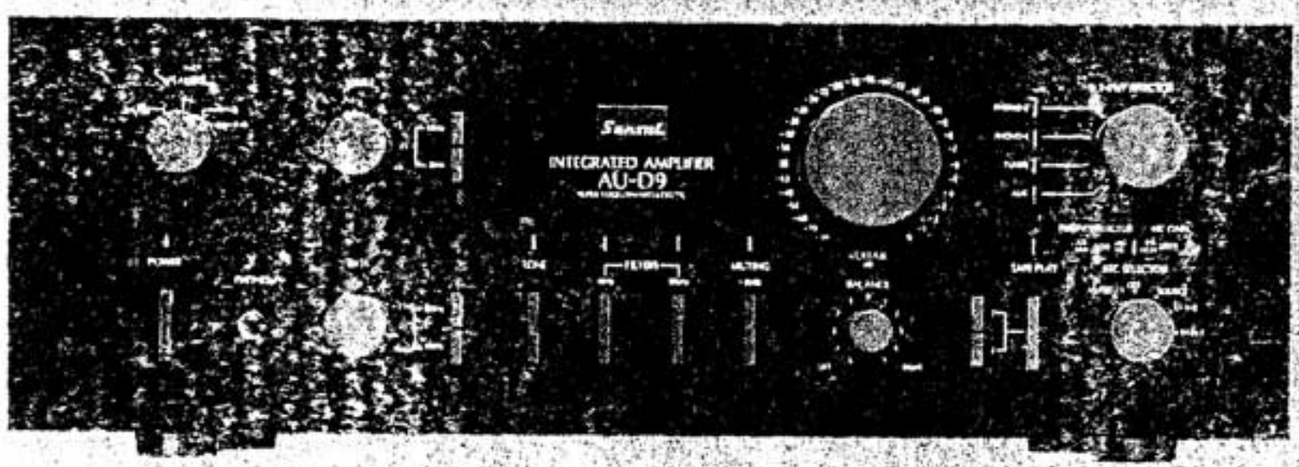

Sansui

SANSUI ELECTRIC CO., LTD

SPECIFICATIONS

Power output
Min. RMS, both channels driven, from 10 to 20,000 Hz, with no more than 0.005 % total harmonic distortion.
95 watts per channel into 8 ohms

Load impedance . . . . . 8 ohms
Total harmonic distortion . . . . . less than 0.005 % at or below rated min. RMS power output
Intermodulation distortion (60 Hz : 7 kHz = 4:1 SMPTE method) . . . . . less than 0.005 % at rated power output
Frequency response (at 1 watt)
Overall (from AUX) . . . . . DC to 300,000 Hz +0 dB, −3.0 dB
RIAA curve deviation (PHONO-MM, 20 Hz to 20 kHz) . . . . . +0.2 dB, −0.2 dB
Rise time . . . . . 0.8 μsec
Slew rate . . . . . ±200 V/μsec
Damping factor (1 kHz, both channels driven) . . . . . 150 into 8 ohms
Input sensitivity and impedance (at 1 kHz)
PHONO-1, 2 (MC) . . . . . HIGH 100 μV/LOW 250 μV/100 ohms
(Max. input capability: 20 mV at 1 kHz, less than 0.01 % total harmonic distortion)
PHONO-1, 2 (MM) . . . . . 2.5 mV/47 kilohms
(Max. input capability: 200 mV at 1 kHz, less than 0.01 % total harmonic distortion)
AUX, TUNER, TAPE PLAY-1, 2 . 250 mV/27 kilohms
Output level and impedance (1,000 Hz)
TAPE REC-1, 2 . . . . . 250 mV into 47 kilohms/600 ohms
Channel separation (1 kHz, at rated power output)
PHONO-1, 2 (MC) . . . . . 50 dB
PHONO-1, 2 (MM) . . . . . 60 dB
AUX, TUNER, TAPE PLAY-1, 2 . 80 dB
Signal to noise ratio (short-circuit, A network)
PHONO-1, 2 (MC) . . . . . 74 dB
PHONO-1, 2 (MM) . . . . . 90 dB
AUX, TUNER, TAPE PLAY-1, 2 . 110 dB
Controls
BASS . . . . . +8 dB, −8 dB at 50 Hz
Tone selector . . . . . 150 Hz, 300 Hz
TREBLE . . . . . +8 dB, −8 dB at 15 kHz
Tone selector . . . . . 3 kHz, 6 kHz
Filter
16 Hz . . . . . −3 dB at 16 Hz (6 dB/oct)
20 kHz . . . . . −3 dB at 20 kHz (6 dB/oct)
MUTING . . . . . −20 dB
Power requirements
Power voltage . . . . . 100, 120, 220, 240 V (50/60 Hz)
For U.S.A. & Canada . . . . . 120 V (60 Hz)
Power consumption
Rated consumption . . . . . 520 watts 650 VA
Dimensions . . . . . 445 mm (17-9/16") W
163 mm (6-7/16") H
403 mm (15-7/8") D
Weight . . . . . 13.7 kg (30.2 lbs) net
15.4 kg (34.0 lbs) packed

- **Design and specifications subject to changes without notice for improvements.**
- **In order to simplify the explanation illustrations may sometimes differ from the originals.**

1. BLOCK DIAGRAM

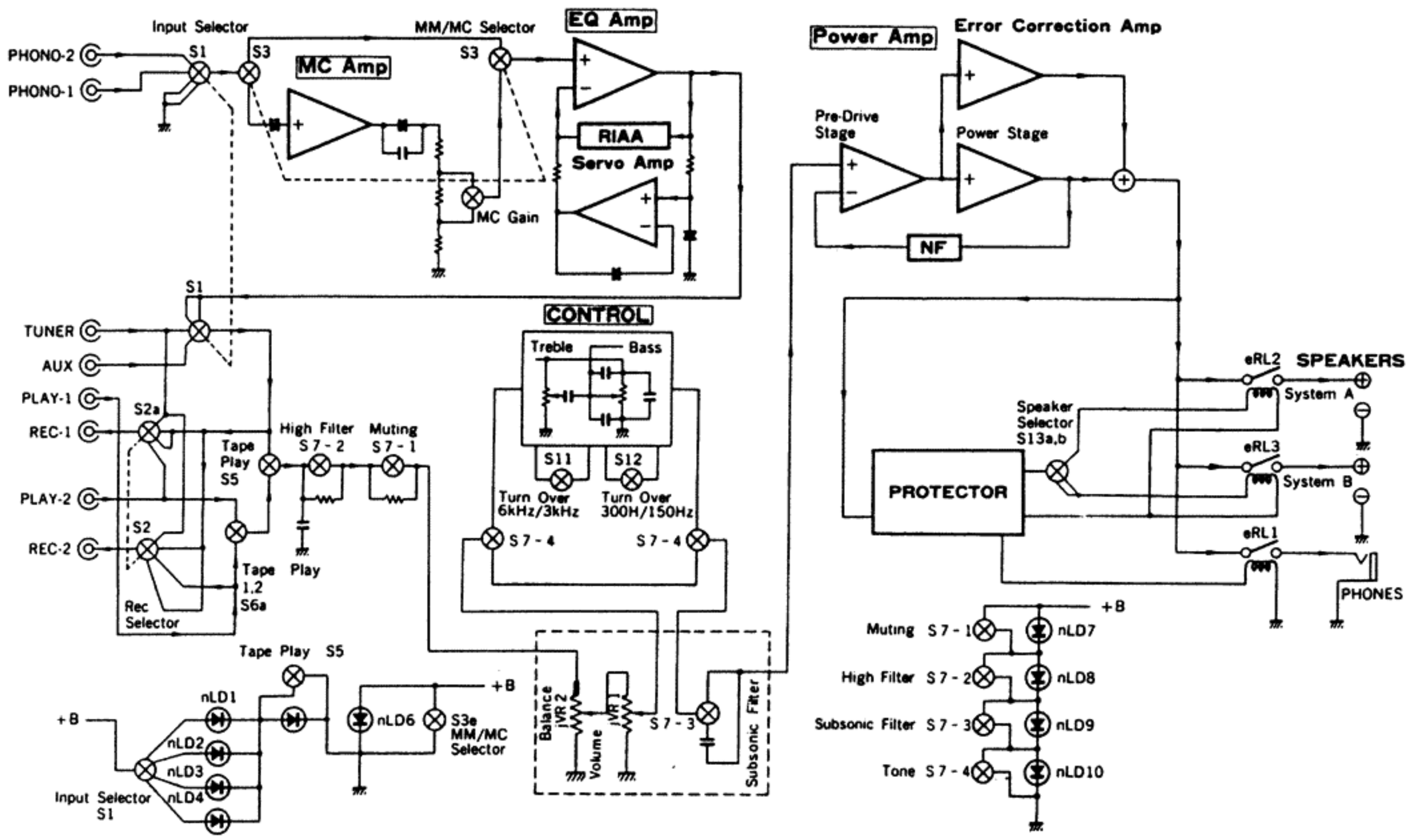

2. OPERATION

2-1. Super Feedforward Amplifier

This amplifier was developed by combination of conventional negative feedback and feedforward techniques.
This feedforward technique helps to eliminate distortions which can not be achieved by the NFB.

The feedforward technique is a technique to nullify, in principle, all types of distortions at the output point by adding distortions of reverse phase but of equal amplitude as those generated in the power amplifier.
The NFB makes use of distortion generated by the output stage and feeds it back to the input, the output stage is bound to have distortion. Therefore, in order to reduce distortion to zero an infinite amount of NFB is required and as a result an amplifier of infinite gain becomes necessary, which is not available in reality.

On the other hand, the feedforward is unlike NFB, finite amount of feedforward can theoretically reduce distortion to zero over a wide frequency range as the feedforward amount does not have to be reduced at higher frequencies.

2-2. Operation of Super Feedforward Amplifier

Fig. 2-2 shows a block diagram of super feedforward amplifier. This circuit consists of voltage amplifier (A1), power amplifier (A2), error correction amplifier (A3) and summing network (Z1 & Z2).
Distortion marked ⅄ is generated by A2 and reverse phased distortion is produced by NFB and fed to A2 and A3.
Reverse phased distortion fed to A2 reduces the form of distortion after NFB and reverse phased distortion fed to A3 is amplified without phase changing.

Fig. 2-1. Shows how distortions can be nulled by application of feedforward.

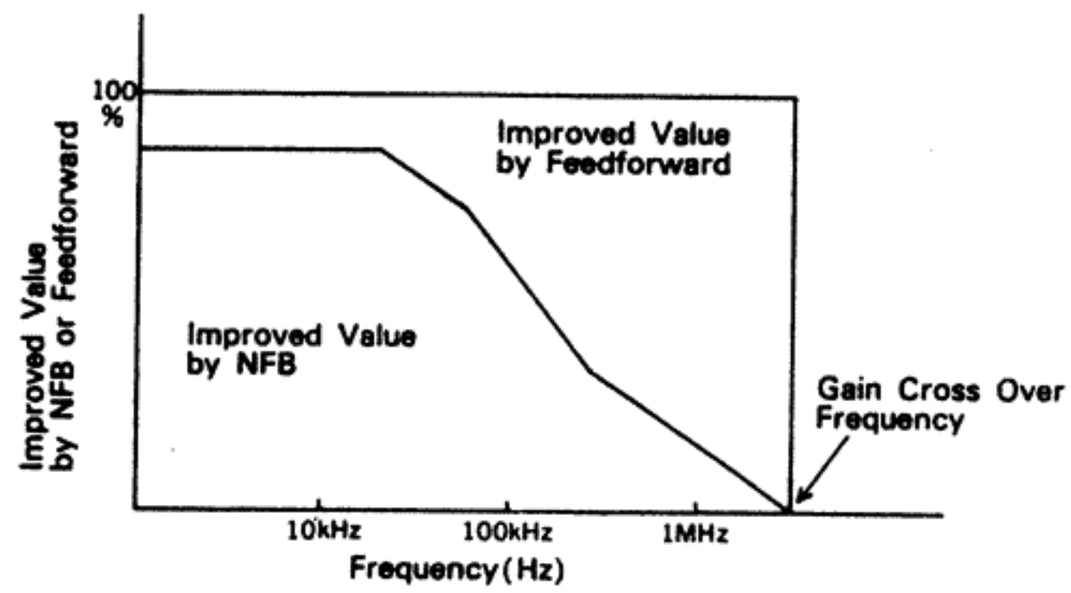

Fig. 2-2.

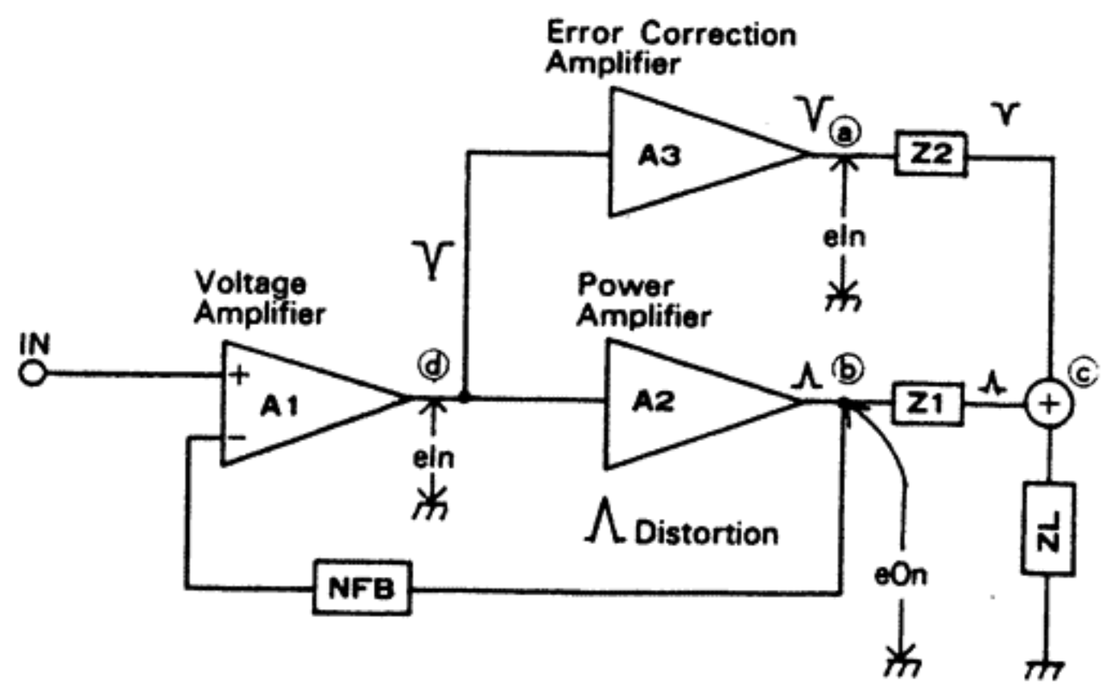

Fig. 2-3 shows distortion voltage (eOn) at point ⓑ and (eIn) at point ⓐ. When these two distortions are added by summing network (Fig. 2-4), complete cancellation from DC to gain cross over frequency is achieved.
The component values of the summing network are decided by both the loop gain of NFB amplifier and the cut-off frequency of phase compensating circuit.

Error correction amplifier
Error correction amplifier A3 produces very small power required for distortion cancellation in the summing network.
For example, if the 100 W amplifier generates 1% distortion, the power is only 10 mW. Therefore, small type of amplifier is used as error correction amplifier. On the actual super feedforward amplifier (Fig. 2-5), L is associated with Lx as mutual-coupling for low power driving of the error correction amplifier, and R4 is substituted by internal resistance of L.

Fig. 2-3. Distortion value VS. Frequency at point ⓐ and ⓑ.

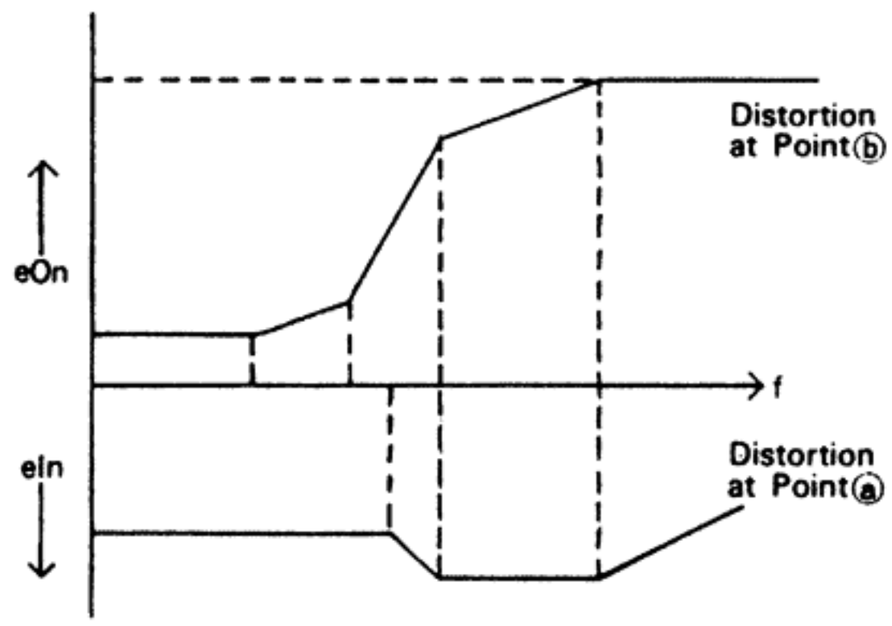

Fig. 2-4. Summing Network

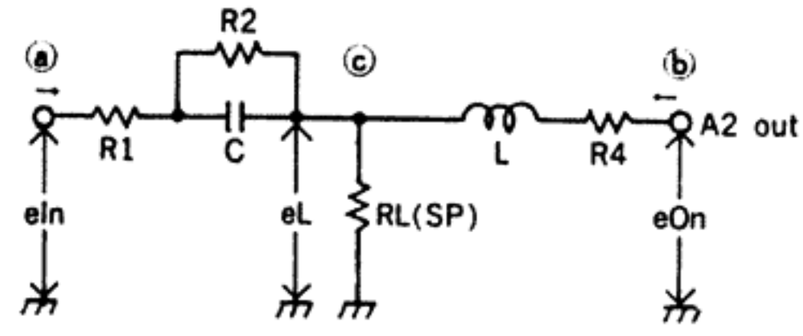

Fig. 2-5.

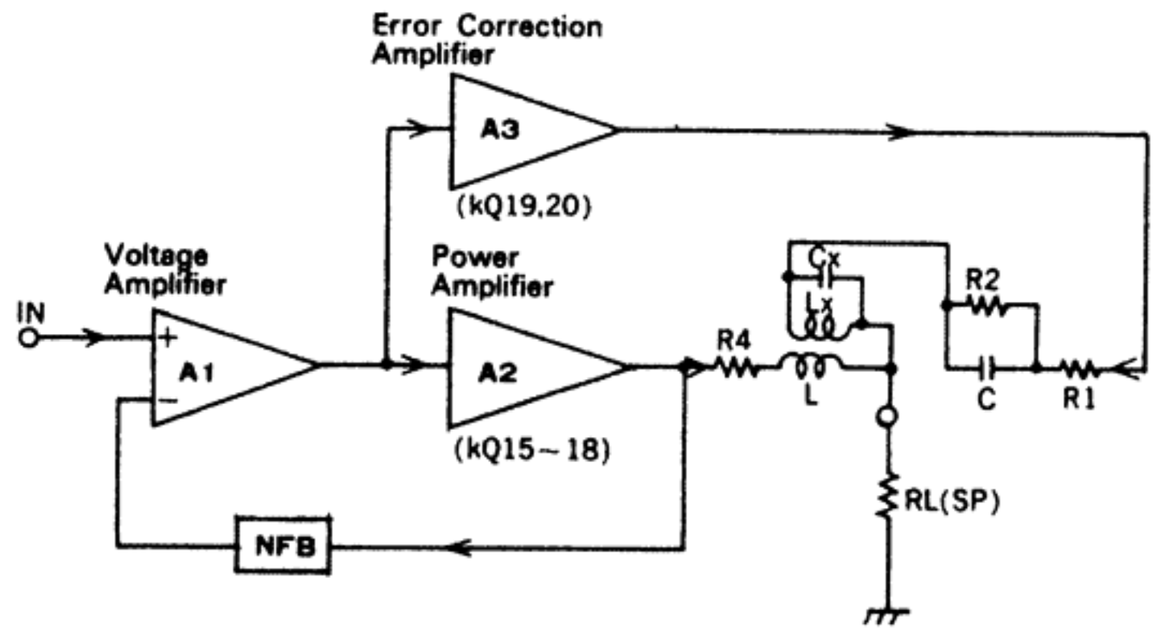

3. PARTS LOCATION & PARTS LIST

• Since some of capacitors and resistors are omitted from parts lists in this Service Manual, refer to the Common Parts List for capacitors & resistors which was appended previously to each Sansui Manual.

3-1. F-3259 Protector Circuit Board (Stock No. 07083601)

Component Side

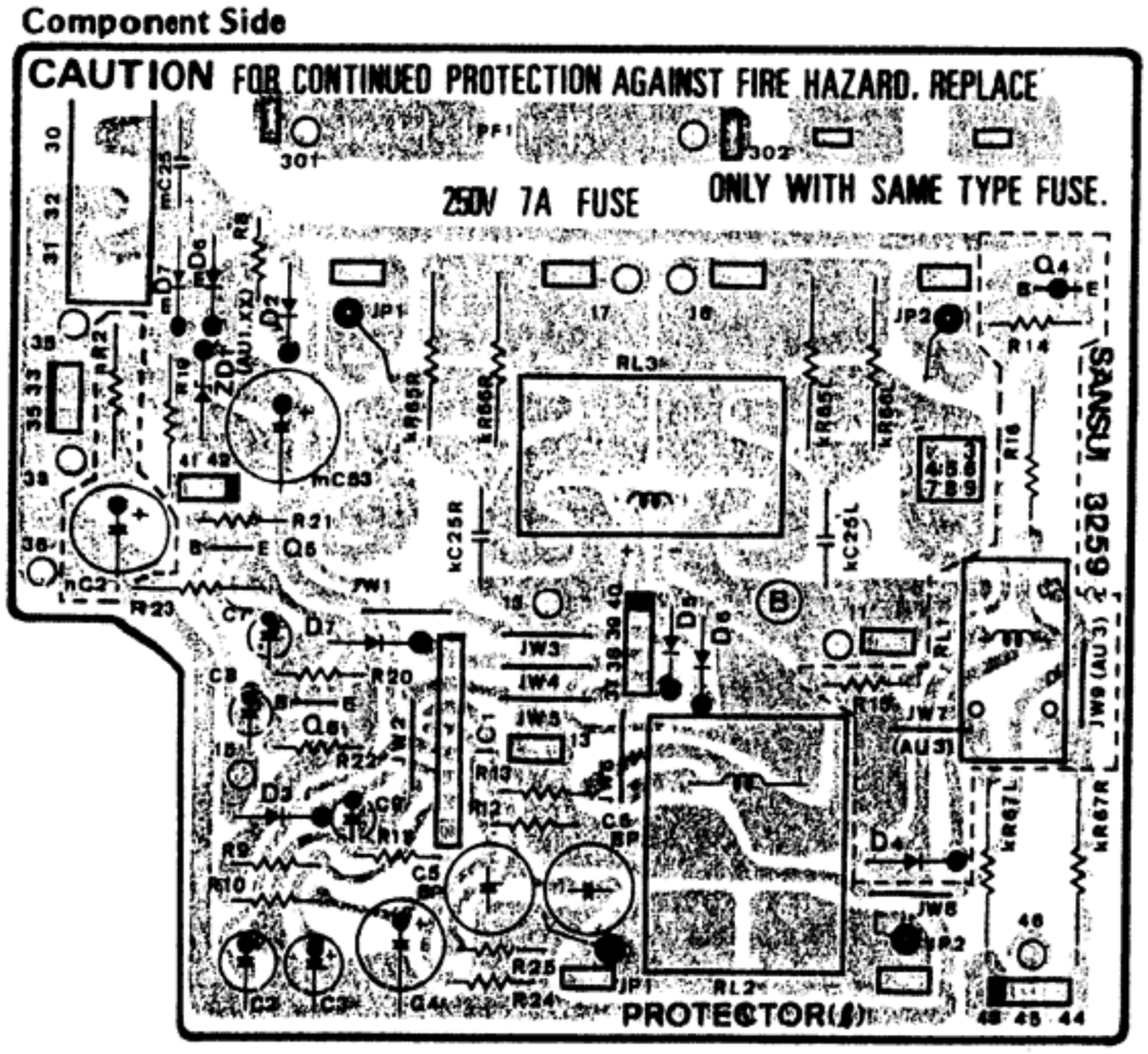

Parts List

Parts No.	Stock No.	Description
kR65	00187700	22Ω 2W N.I.R.
kR66	00187700	22Ω 2W N.I.R.
kR67	00187800	220Ω 2W N.I.R.
kC25	00411600	0.047μF 400V P.C.
•Transistor		
IQ4	07197001, 2	2SA733A Q, P
IQ5	03059502, 3	2SC945 P, K
IQ6	03059502, 3	2SC945 P, K
•IC		
IIC1	03069000	HA12002
•Diode		
ID2	03111600	1S2473D
ID3	03111600	1S2473D
ID4	03117700	10E-2
IR19	00181800	2.7kΩ 1W N.I.R.
IC5	00302600	100μF 6.3V E.B.
IC6	00302600	100μF 6.3V E.B.
IRL1	11506200	Relay
IRL2	11504800	Relay
IRL3	07198400	Relay
•Diode		
mD6	07112300	10DF-2
mD7	07112300	10DF-2
	07203600	8P Terminal, speaker
pF1	07189000	Fuse 250 V 4A (220 V ~ 240 V)
	07189400	Fuse 250 V 8A (100 V ~ 120 V)

• Abbreviations

C.R.	Carbon Resistor	E.L.	Low Leak Electrolytic Capacitor
S.R.	Solid Resistor	E.B.	Bi-Polar Electrolytic Capacitor
Ce.R.	Cement Resistor	E.BL.	Low Leak Bi-Polar Electrolytic Capacitor
M.R.	Metal Film Resistor	Ta.C.	Tantalum Capacitor
F.R.	Fusing Resistor	F.C.	Film Capacitor
N.I.R.	Non-Inflammable Resistor	M.P.	Metalized Paper Capacitor
C.C.	Ceramic Capacitor	P.C.	Polystyrene Capacitor
C.T.	Ceramic Capacitor, Temperature Compensation	G.C.	Gimmic Capacitor
E.C.	Electrolytic Capacitor		

3-2. F-3258 Power Amp Circuit Board (Stock No. 07084001)

Component Side

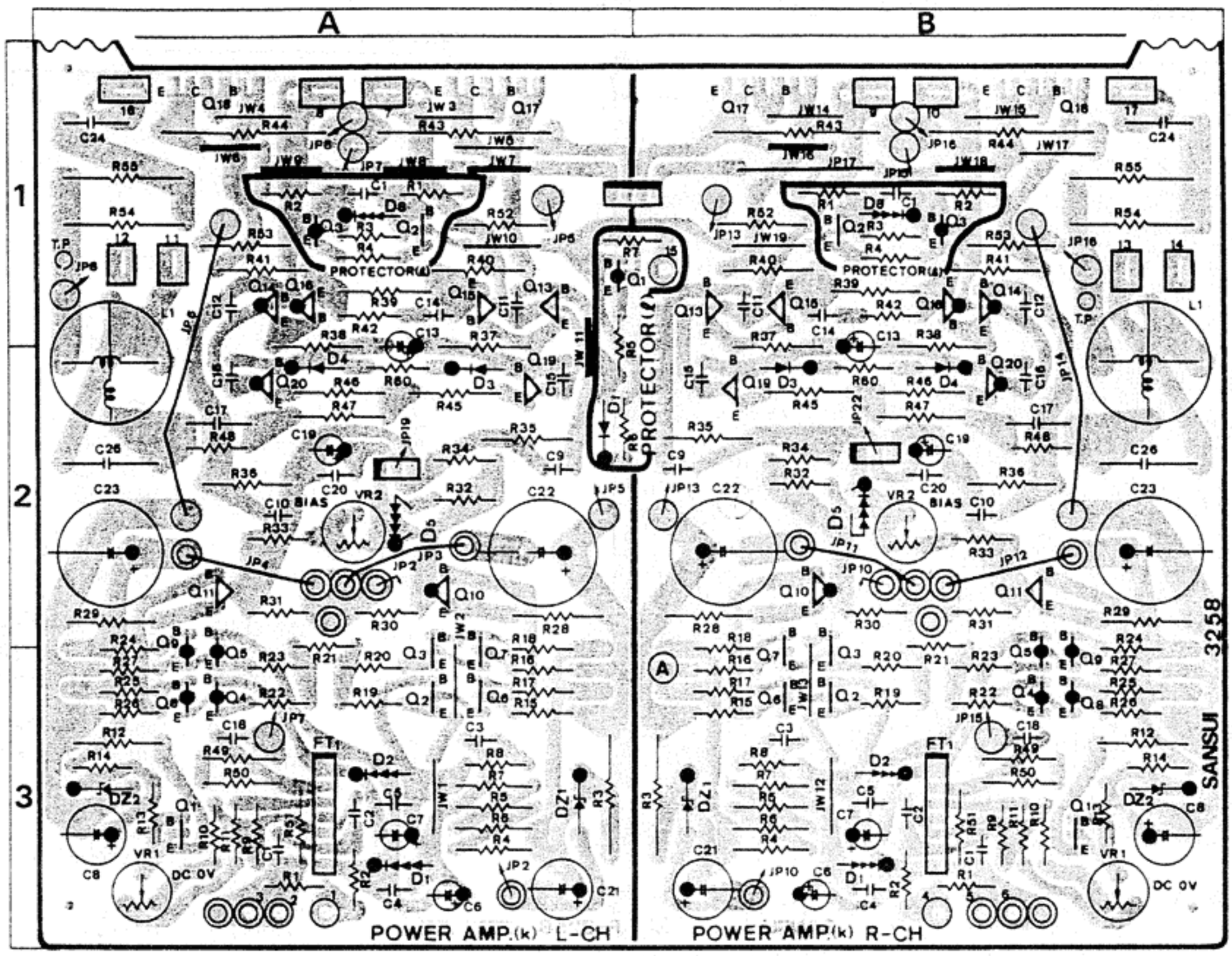

Parts List

Parts No.	Stock No.	Description
●Transistor		
kQ1	03067400, 1	2SC1845 F, E
kQ2	03067400, 1	2SC1845 F, E
kQ3	03067400, 1	2SC1845 F, E
kQ4	03010900, 1	2SA992 F, E
kQ5	03010900, 1	2SA992 F, E
kQ6	03067400, 1	2SC1845 F, E
kQ7	03067400, 1	2SC1845 F, E
kQ8	03010900, 1	2SA992 F, E
kQ9	03010900, 1	2SA992 F, E
kQ10	03007901, 2	2SA899 B, V
kQ11	03064001, 2	2SC1904 B, V
kQ13	03064001, 2	2SC1904 B, V
kQ14	03007901, 2	2SA899 B, V
kQ15	03069300, 1	2SC2238 O, Y
kQ16	03012400, 1	2SA968 O, Y
kQ17	07260200, 1	2SC2773LB O, Y
kQ18	07260100, 1	2SA1169LB O, Y
kQ19	03069300, 1	2SC2238 O, Y
kQ20	03012400, 1	2SA968 O, Y
●FET		
kFT1	03703601~4	μPA68H L1, L2, M1, M2
●Varistor		
kD1	03401700	MV-103
kD2	03401700	MV-103
●Diode		
kD3	03111600	1S2473D
kD4	03111600	1S2473D
●Zener Diode		
kDZ1	03171900	RD27F B
kDZ2	03165700	RD33E B
kR3	00187400	1.8kΩ 2W N.I.R.
kR43	07221600	0.22Ω 5W Ce.R.
kR44	07221600	0.22Ω 5W Ce.R.
kR54	00187700	22Ω 2W N.I.R.
kR55	00187700	22Ω 2W N.I.R.

Parts No.	Stock No.	Description
kC1	00371200	22pF 125V P.C.
kC2	00371200	22pF 125V P.C.
kC4	00407400	0.033μF 100V F.C.
kC5	00407400	0.033μF 100V F.C.
kC9	00403800	0.001μF 100V F.C.
kC10	00403800	0.001μF 100V F.C.
kC11	00371700	33pF 125V P.C.
kC12	00371700	33pF 125V P.C.
kC14	00405400	0.0047μF 100V F.C.
●Varistor		
kD5	03401601, 2	STV-3H Y, G
kC15	00370100	10pF 125V P.C.
kC16	00370100	10pF 125V P.C.
kC17	00411300	33pF 125V P.C.
kC18	00371700	33pF 125V P.C.
kC20	00407800	0.047μF 100V F.C.
kC21	07262600	100μF 50V E.C.
kC22	07262700	470μF 100V E.C.
kC23	07262700	470μF 100V E.C.
kC24	00411600	0.047μF 100V F.C.
kC26	00410300	0.47μF 250V F.C.
kL1	07210700	Inductor
kVR1	10341500	100Ω (B) Volume, center DC 0V adj.
kVR2	10342100	1kΩ (B) Volume, bias current adj.
●Transistor		
lQ1	03010900, 1	2SA992 F, E
lQ2	03065200~2	2SC1439 G, B, V
lQ3	07219800~2	2SA858 G, B, V
●Diode		
lD1	03111600	1S2473D
lD5	03117700	10E-2
lD6	03117700	10E-2
lD7	03111600	1S2473D
●Varistor		
lD8	03401700	MV-103

3-3. F-3252 Equalizer Amp & Power Supply Circuit Board (Stock No. 07083901)

Component Side

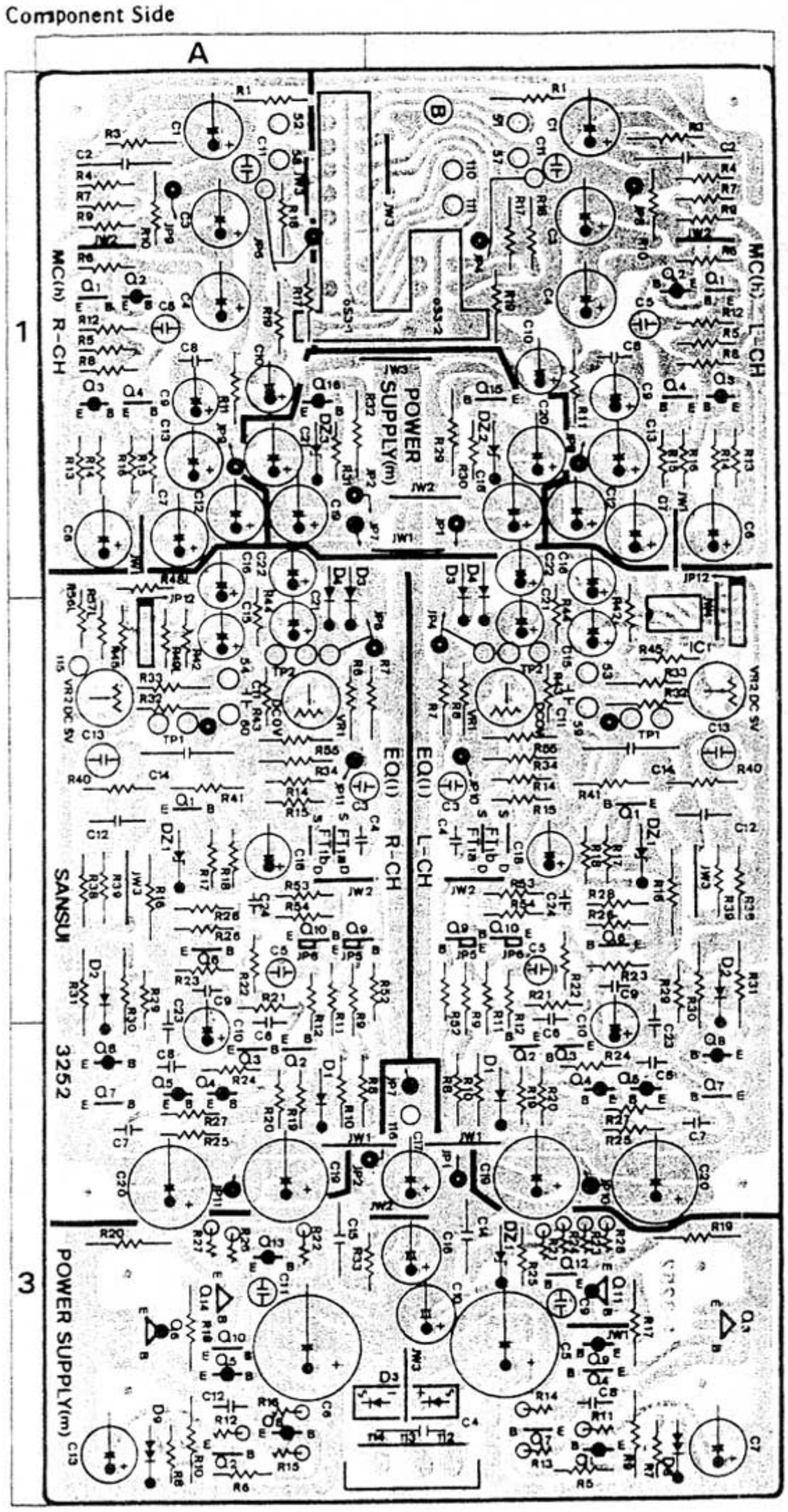

Parts List

Parts No.	Stock No.	Description
•Transistor		
hQ1	03068500, 1	2SC1844 F, E
hQ2	03011700, 1	2SA991 F, E
hQ3	03010900, 1	2SA992 F, E
hQ4	03067400, 1	2SC1845 F, E
hC1	00324500	220μF 25V E.L.
hC2	00407800	0.047μF 100V M.P.
hC8	00407800	0.047μF 100V M.P.
•Transistor		
iQ1	03067400, 1	2SC1845 F, E
iQ2	03067400, 1	2SC1845 F, E
iQ3	03067400, 1	2SC1845 F, E
iQ4	03010900, 1	2SA992 F, E
iQ5	03010900, 1	2SA992 F, E

Parts List

Parts No.	Stock No.	Description
iQ6	03067400, 1	2SC1845 F, E
iQ7	03064001, 2	2SC1904 B, V
iQ8	03007901, 2	2SA899 B, V
•FET		
iFT1	03703500	2SK146
•IC		
iIC1	03607700	NJM4558D
•Diode		
iD1	03111600	1S2473D
iD2	03111600	1S2473D
iD3	03111600	1S2473D
iD4	03111600	1S2473D
•Zener Diode		
iDZ1	03163200	RD13E C
iR39	00216900	2.2kΩ 1/2W M.R.
iR40	00222900	6.8kΩ 1/2W M.R.
iR41	00216500	20kΩ 1/2W M.R.
iC4	00371200	22pF 125V P.C.
iC6	00370100	10pF 125V P.C.
iC7	00370100	10pF 125V P.C.
iC8	00371700	33pF 125V P.C.
iC9	00371700	33pF 125V P.C.
iC11	00405200	0.0039μF 100V M.C.
iC12	00413900	0.033μF 100V M.P.
iC14	00414500	0.056μF 100V M.P.
iC23	00407800	0.047μF 100V M.P.
iVR1	10341500	100Ω (B) Volume, DC 0V adj.
iVR2	10342500	4.7kΩ (B) Volume, DC Servo 0V adj.
•Transistor		
mQ1	03010900, 1	2SA992 F, E
mQ2	03067400, 1	2SC1845 F, E
mQ3	03084500, 1	2SD356 C, D
	03086101, 2	2SD357 D, E
mQ4	03067400, 1	2SC1845 F, E
mQ5	03010900, 1	2SA992 F, E
mQ6	03032800, 1	2SB526 C, D
	03034401, 2	2SB527 D, E
mQ7	03067400, 1	2SC1845 F, E
mQ8	03010900, 1	2SA992 F, E
mQ9	03010900, 1	2SA992 F, E
mQ10	03067400, 1	2SC1845 F, E
mQ11	03032800, 1	2SB526 C, D
mQ12	03067400, 1	2SC1845 F, E
mQ13	03010900, 1	2SA992 F, E
mQ14	03084500, 1	2SD356 C, D
mQ15	03085200, 1	2SD438 D, E
mQ16	03033600, 1	2SB560MP D, E
•Diode		
mD3	07193300	UB-152LFF
•Varistor		
mD8	03401500	MV-12
mD9	03401500	MV-12
•Zener Diode		
mDZ1	03163100	RD13E B
mDZ2	03163300	RD15E B
mDZ3	03163300	RD15E B
mC4	00411800	0.1μF 250V M.P.
mC8	00407800	0.047μF 100V M.P.
mC12	00407800	0.047μF 100V M.P.
mC14	07255800	0.22μF 200V M.P.
mC15	07255800	0.22μF 200V M.P.
oS3	07219000	Push Switch, phono mc gain

3-4. F-3466 Bass, Treble Volume Circuit Board (Stock No. 00633501)

Component Side

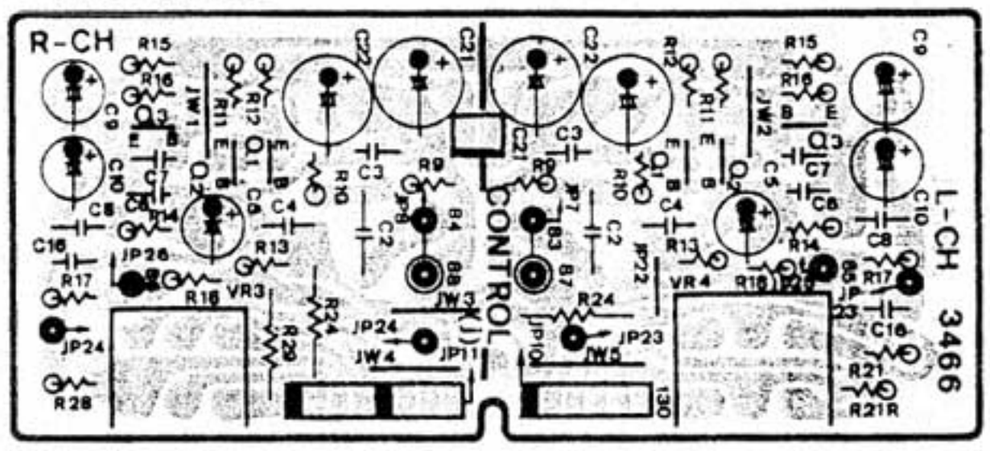

Parts List

Parts No.	Stock No.	Description
•Transistor		
jQ1	03067400, 1	2SC1845 F, E
jQ2	03067400, 1	2SC1845 F, E
jQ3	03010900, 1	2SA992 F, E
jC2	00409800	0.33μF 100 V M.C.
jC3	00371700	33 pF 125 V P.C.
jC4	00407800	0.047μF 100 V M.C.
jC6	00371200	22 pF 125 V P.C.
jC7	00370100	10 pF 125 V P.C.
jC8	00407800	0.047μF 100 V M.C.
jC16	00371400	27 pF 125 V P.C.
jVR3	07271700	Variable Resistor 100 kΩ (C)
jVR4	07271700	Variable Resistor 100 kΩ (C)
oS11	07271600	Push Switch
oS12	07271500	Push Switch

• Note: The circuit board, F-3249, F-3253, F-3239, F-3240, F-3246, F-3250, F-3251, F-3255, F-3467, F-3257, F-3260, F-3261, F-3382 & F-3383 are not supplied as the assembled. However, the individual parts on the circuit board are provided by orders.

3-5. F-3467 Turn-over Circuit Board

Component Side

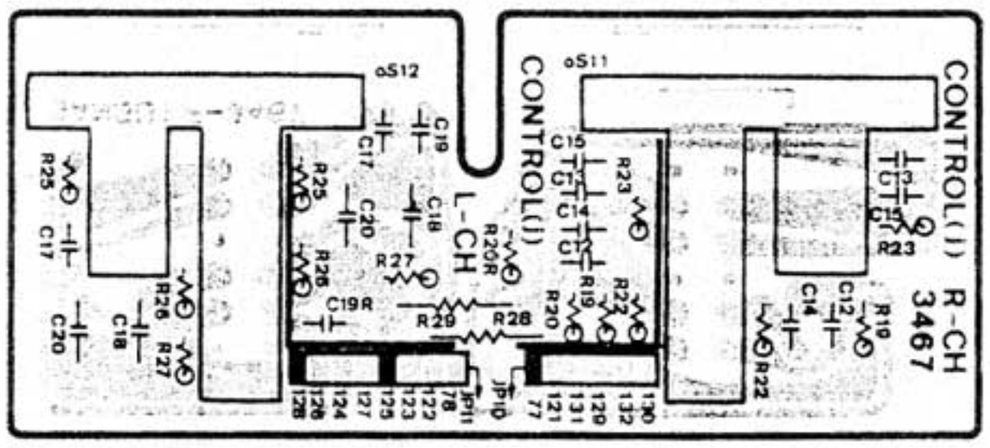

Parts List

Parts No.	Stock No.	Description
jC12	00404200	0.0015μF 100 V M.C.
jC13	00406000	0.0082μF 100 V M.C.
jC14	00404000	0.0012μF 100 V M.C.
jC15	00405800	0.0068μF 100 V M.C.
jC17	00406600	0.015μF 100 V M.C.
jC18	00408400	0.082μF 100 V M.C.
jC19	00406600	0.015μF 100 V M.C.
jC20	00408400	0.082μF 100 V M.C.

3-6. F-3249 Input Termianl Circuit Board

Parts List

Parts No.	Stock No.	Description
nR1	00182800	3.9kΩ 1W N.I.R.
oS1	07219600	Rotary Slide Switch, input selector
oS2	07219500	Rotary Slide Switch, rec selector
	22006300	4P Input Terminal, phono-1, 2
	22006200	4P Input Terminal, tuner, aux
	22006500	4P Input Terminal, tape-1, 2

3-7. F-3253 Control Circuit Board

Parts List

Parts No.	Stock No.	Description
jC1	00404800	0.0027μF 100V M.C.
jC7	00408000	0.056μF 100V M.C.
jVR2	07218200	250kΩ (MN) Volume, balance
oS7	07271800	Push Switch, tone, low/high-filter, muting

3-8. F-3239 Tape-Play Switch Circuit Board

Parts List

Parts No.	Stock No.	Description
oS2	07218700	Push Switch, tape play (on, off)

3-9. F-3240 Tape-Play 1/2 Selector Switch Circuit Board

Parts List

Parts No.	Stock No.	Description
oS3	07218900	Push Switch, tape play (play-1, 2)

3-10. F-3246 Bias Compensating Circuit Board

Parts List

Parts No.	Stock No.	Description
•Transistor		
kQ12	03067400, 1	2SC1845 F, E

3-11. F-3255 Master Volume Unit Circuit Board

Parts List

Parts No.	Stock No.	Description
jVR1	07218100	100kΩ (S) x 2 Volume, master

3-12. F-3257 Muting, Subsonic, Tone-Indicator Circuit Board

Parts List

Parts No.	Stock No.	Description
	07581900	1P L.E.D. Holder
•LED		
nLD7	03193700	SEL1110S
nLD8	03193700	SEL1110S
nLD9	03193700	SEL1110S
nLD10	03193700	SEL1110S
nR2	00182800	3.9kΩ 1W N.I.R.

3-13. F-3250 Head Phone Jack Circuit Board

Parts List

Parts No.	Stock No.	Description
	24306000	Head Phone Jack

3-14. F-3251 Speakers Switch Circuit Board

Parts List

Parts No.	Stock No.	Description
oS13	07219400	Rotary Switch, speaker selector

3-15. F-3260 Power Indicator Circuit Board

Parts List

Parts No.	Stock No.	Description
	07581900	1P L.E.D. Holder
•LED		
nLD11	03193700	SEL1110S

3-16. F-3261 Input Indicator Circuit Board

Parts List

Parts No.	Stock No.	Description
	07581900	1P L.E.D. Holder
•LED		
nLD1	03193700	SEL1110S
nLD2	03193700	SEL1110S
nLD3	03193700	SEL1110S
nLD4	03193700	SEL1110S
nLD5	03193700	SEL1110S
nLD6	07246200	SEL1710K

3-17. F-3382 Rectifier Circuit Board (L-ch)

Parts List

Parts No.	Stock No.	Description
•Diode		
mD4	03112900	SS-3
mD5	03113000	SS-3R
mR69	00190300	4.7kΩ 2W N.I.R.
mR70	00190300	4.7kΩ 2W N.I.R.

3-18. F-3383 Rectifier Circuit Board (R-ch)

Parts List

Parts No.	Stock No.	Description
•Diode		
mD4	03112900	SS-3
mD5	03113000	SS-3R
mR69	00190300	4.7kΩ 2W N.I.R.
mR70	00190300	4.7kΩ 2W N.I.R.

4. ADJUSTMENTS

Notes:
1. Before adjusting, set the unit in horizontally.
2. Level Volume . . . . . Minimum
3. Room Temperature . . . . . 18°C ~ 28°C (65°F ~ 83°F)
4. For this adjustment, run the unit for more than 3 minutes after the power is switched ON.

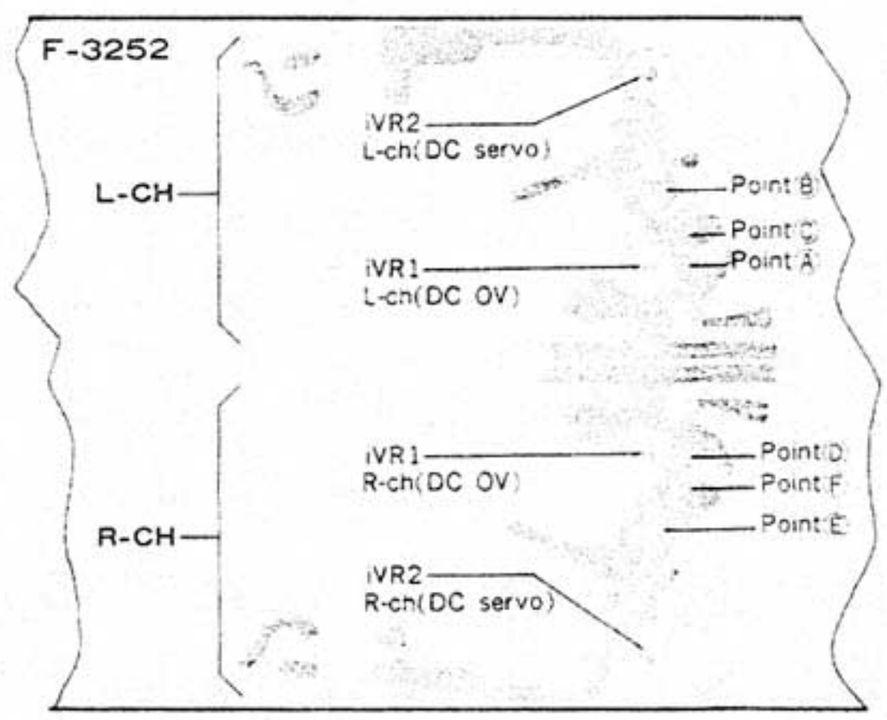

Fig. 4-1

4-1. F-3258 Driver Circuit Adjustment (See Top View)

STEP	SUBJECT	MEASURE OUTPUT	ADJUST	ADJUST FOR	REMARKS
1.	DC 0V Adj. L-CH	Speaker terminal	kVR1, L-ch (F-3258)	DC 0V	Before turning ON power switch, set kVR1 to center position.
2.	DC 0V Adj. R-CH	Speaker terminal	kVR1, R-ch (F-3258)	DC 0V	
3.	Bias current Adj. L-CH	Between emitters of power transistors, kQ17 & kQ18 (between Ⓖ & Ⓗ)	kVR2, L-ch (F-3258)	DC 10 mV	Before turning ON power switch, turn kVR2 fully counterclockwise. This bias current adjustment converts current value into voltage by Ohm's law.
4.	Bias current Adj. R-CH	Between emitters of power transistors, kQ17 & kQ18 (between Ⓘ & Ⓙ)	kVR2, R-ch (F-3258)	DC 10 mV	

4-2. F-3252 Equalizer Circuit Adjustment (Fig. 4-1)

STEP	SUBJECT	MEASURE OUTPUT	ADJUST	ADJUST FOR	REMARKS
1.	DC 0V Adj. L-CH	Between Point Ⓑ & Point Ⓐ (GND)	iVR1, L-ch (F-3252)	DC 0V	Connect Point Ⓒ to Point Ⓐ (GND)
2.	DC 0V Adj. R-CH	Between Point Ⓔ & Point Ⓓ (GND)	iVR1, R-ch (F-3252)	DC 0V	Connect Point Ⓕ to Point Ⓓ (GND)
3.	DC 0V Adj. L-CH (Servo)	Between Point Ⓑ & Point Ⓐ (GND)	iVR2, L-ch (F-3252)	DC 0V	
4.	DC 0V Adj. R-CH (Servo)	Between Point Ⓔ & Point Ⓓ (GND)	iVR2, R-ch (F-3252)	DC 0V	

5. OTHER PARTS

5-1. Front View

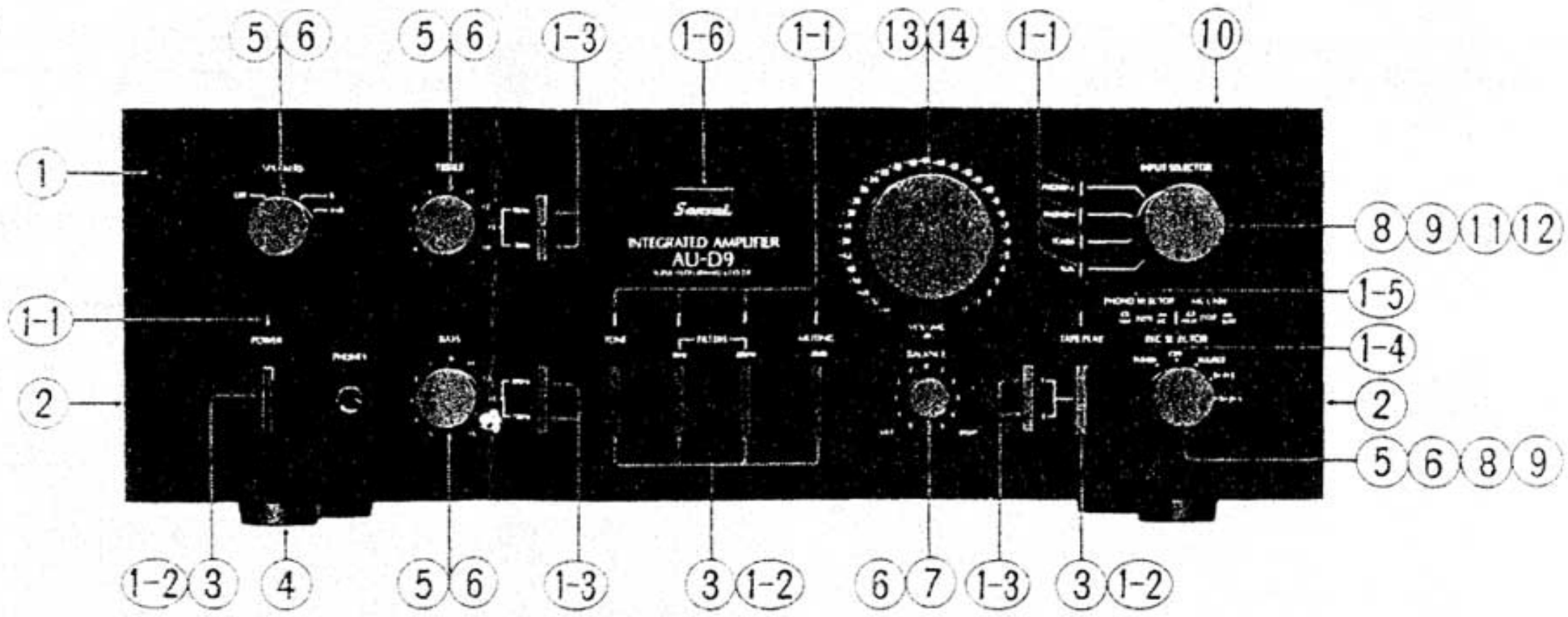

5-2. Top View

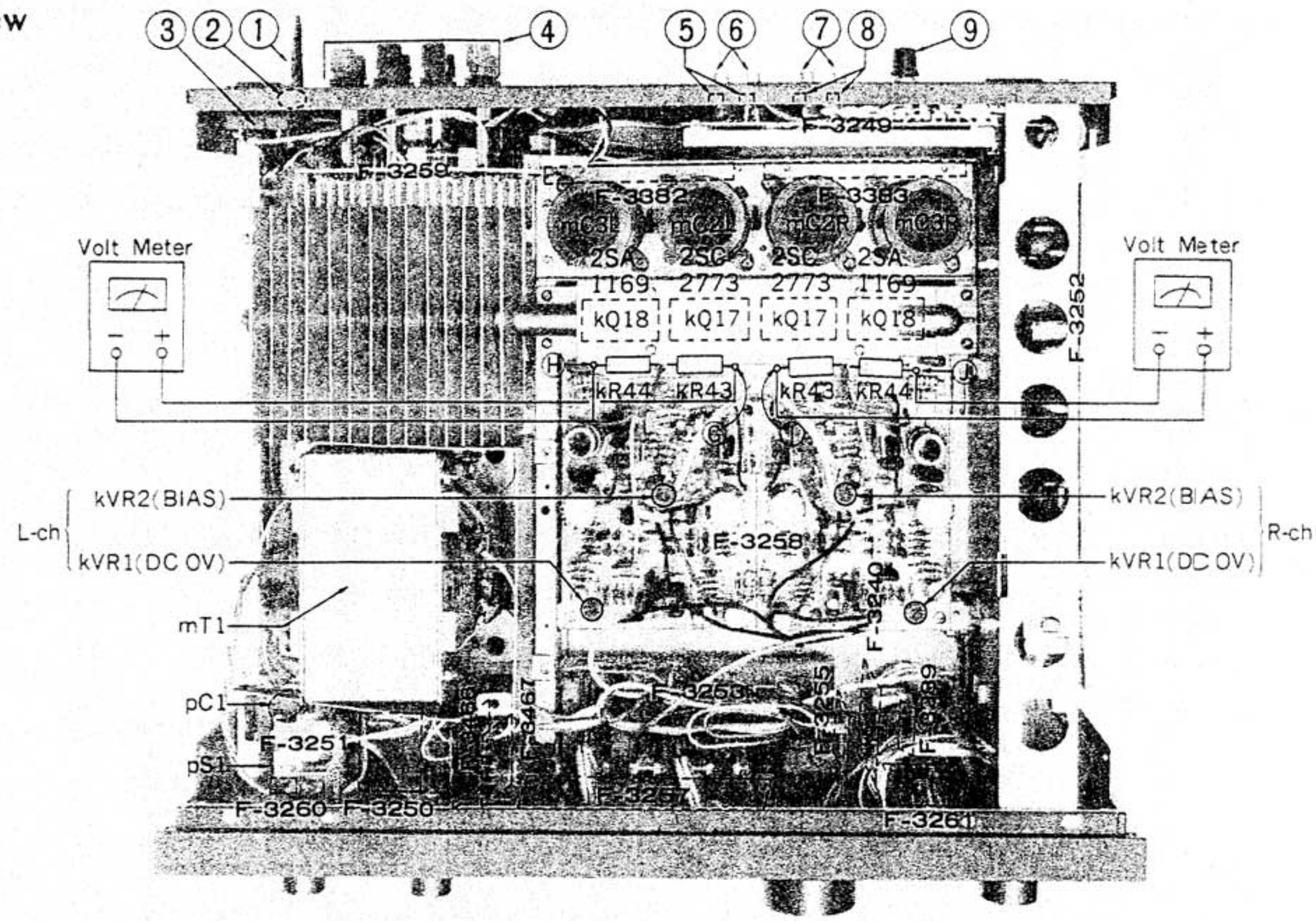

Parts List <Front View>

Parts No.	Stock No.	Description
1	07575700	Front Panel Ass'y
1-1	07578000	Indicator Plate, red
1-2	07581200	Push Knob Guide, power, tone, filters, muting, tape play
1-3	07578400	Push Knob Ass'y, 6/3 kHz, 300/150 Hz, tape play 1/2
1-4	07578100	Indicator Plate, green
1-5	71061500	Push Knob Ass'y, phono selector, MC gain
1-6	07582700	Sansui Badge
2	07571200	Side Panel
3	07580500	Push Knob, power, tone, filters, muting, tape play
4	55073500	Leg
5	07520900	Knob, speakers, treble, bass, rec selector
6	07595300	Masking Sheet (D), speakers, treble, bass, balance, rec selector
7	07521000	Knob, balance VR
8	60460410	Coupler, joint shaft
9	63062310	Bearing Plate, joint shaft
10	07585120	Wood Bonnet Ass'y
11	07520800	Knob, input selector SW
12	50485300	Masking Sheet (A), input selector
13	07520700	Knob, master VR
14	07595200	Masking Sheet (C), master VR

Parts List <Top View>

Parts No.	Stock No.	Description
1	38004700	Power Cord
2	39106000	Strain Relief 4φ
3	07217500	AC Outlet
4	07203600	8P Speaker Terminal
5	22006500	4P Input Terminal, tape-2
6	22006200	4P Input Terminal, tuner, aux
7	22006300	4P Input Terminal, phono-1/2
8	22006500	4P Input Terminal, tape-1
9	22301900	Ground Terminal
pC1	00386000	0.01μF 150V C.C.
mC2	07259200	12000μF 71V E.C.
mC3	07259200	12000μF 71V E.C.
pS1	07259400	Push Switch, power
mT1	15000601	Power Transformer

• Design and specifications subject to change without notice for improvement.
• La présentation et les spécifications sont susceptibles d'être modifiées sans préavis par suites d'améliorations éventuelles.
• Änderungen, die dem technischen Fortschritt dienen, bleiben vorbehalten.

6. SCHEMATIC DIAGRAM

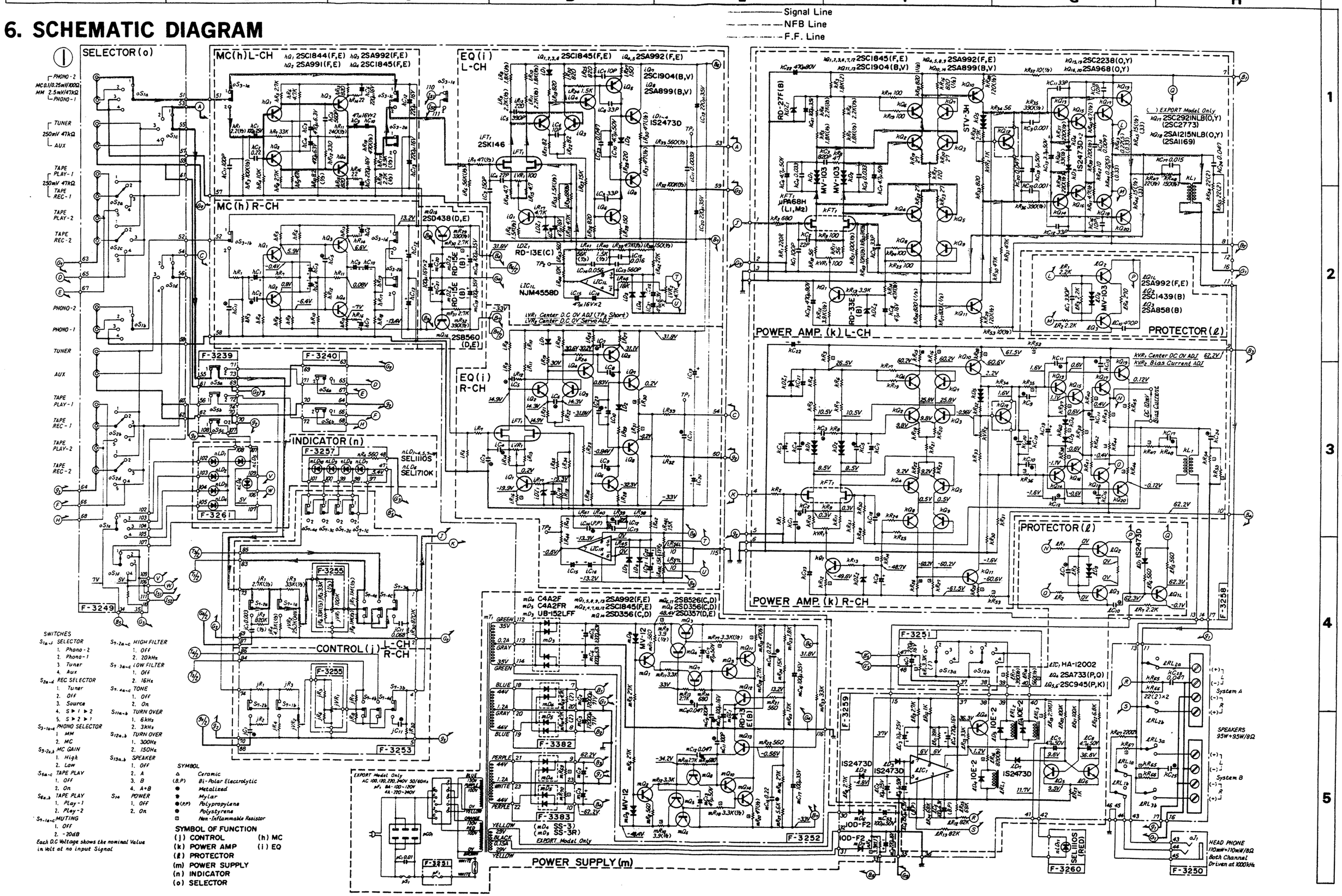

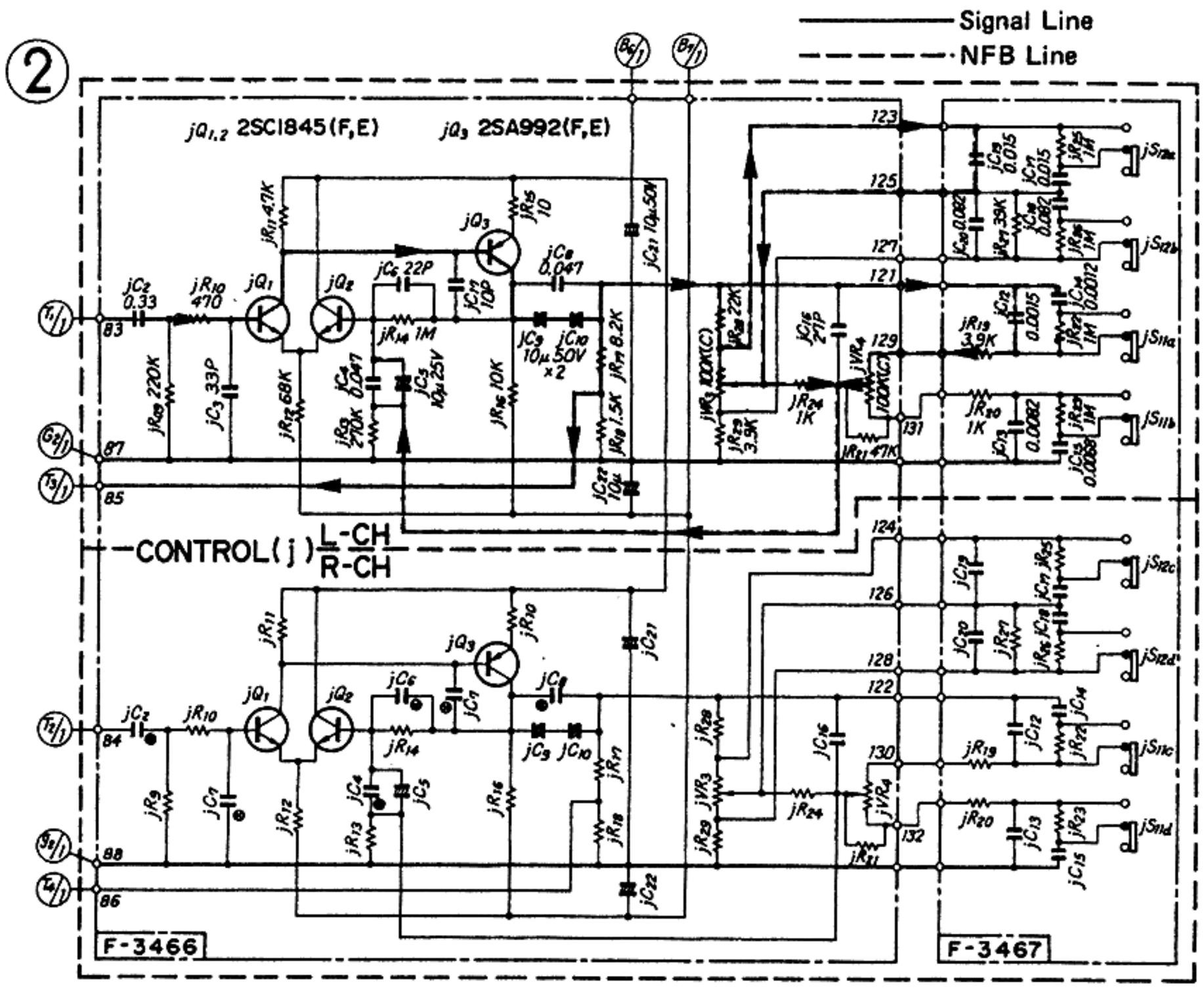

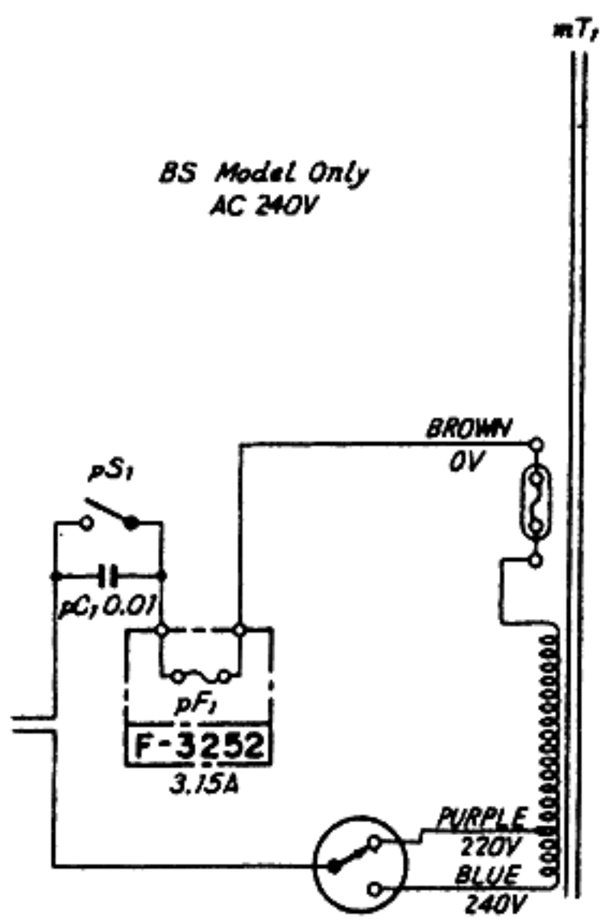

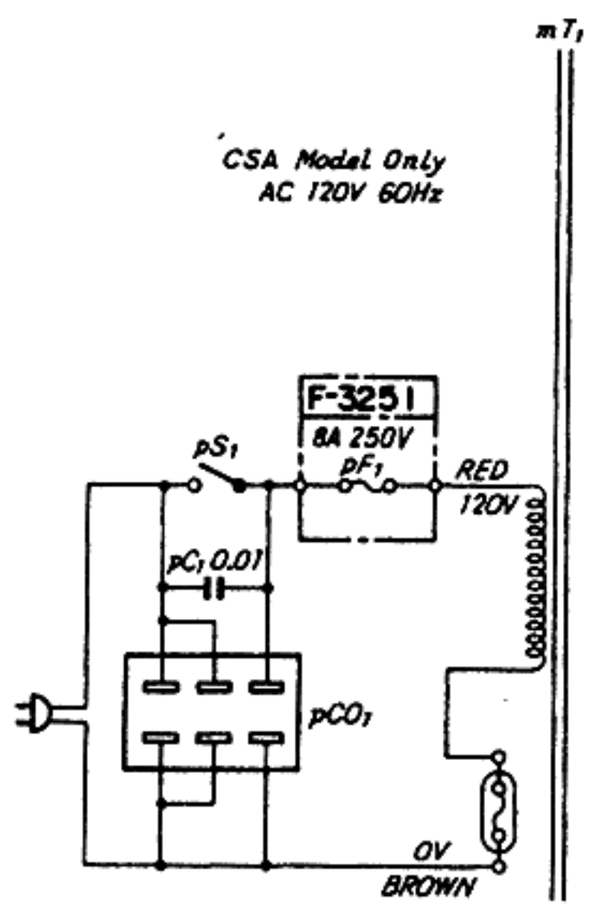

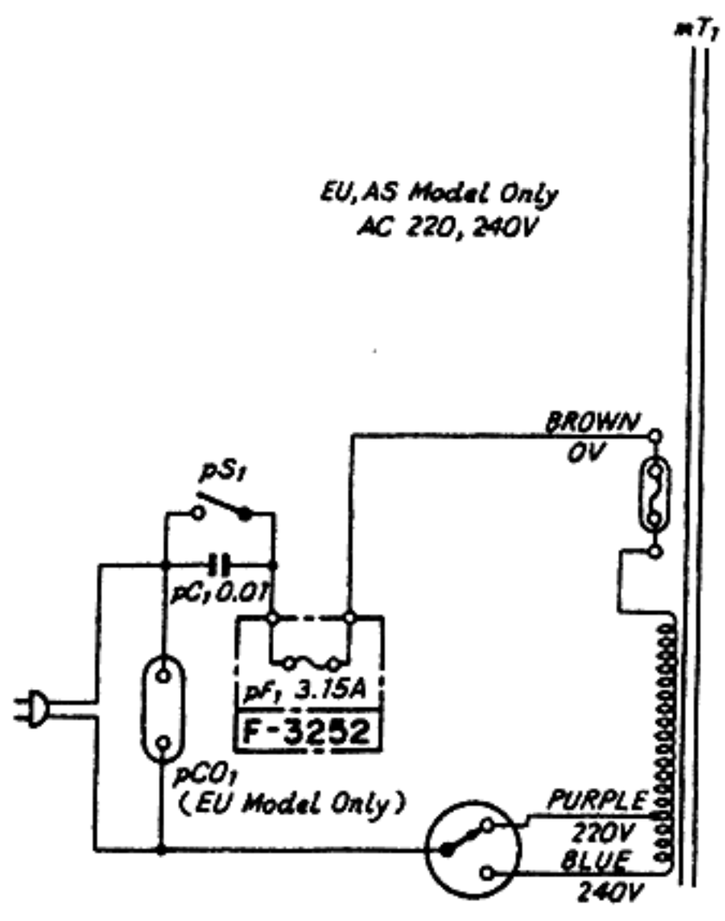

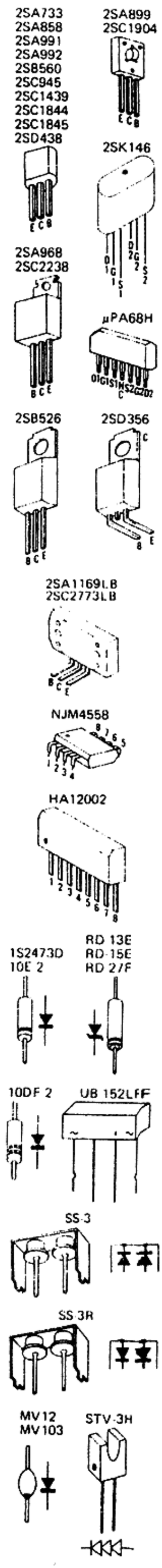

- Design and specifications subject to change without notice for improvement.
- La présentation et les spécifications sont susceptibles d'être modifiées sans préavis par suites d'améliorations éventuelles.
- Änderungen, die dem technischen Fortschritt dienen, bleiben vorbehalten.

7. ATTACHMENT OF EQUALIZER CIRCUIT BOARD

1. Push in each shaft of phono selector and MC gain switch on the equalizer circuit board.

2. Keep pushing two driving levers with screw driver to front panel side. Then attach the board to chassis and tighten with mounting screws.

3. After this teplacement, check if the push switches function properly.

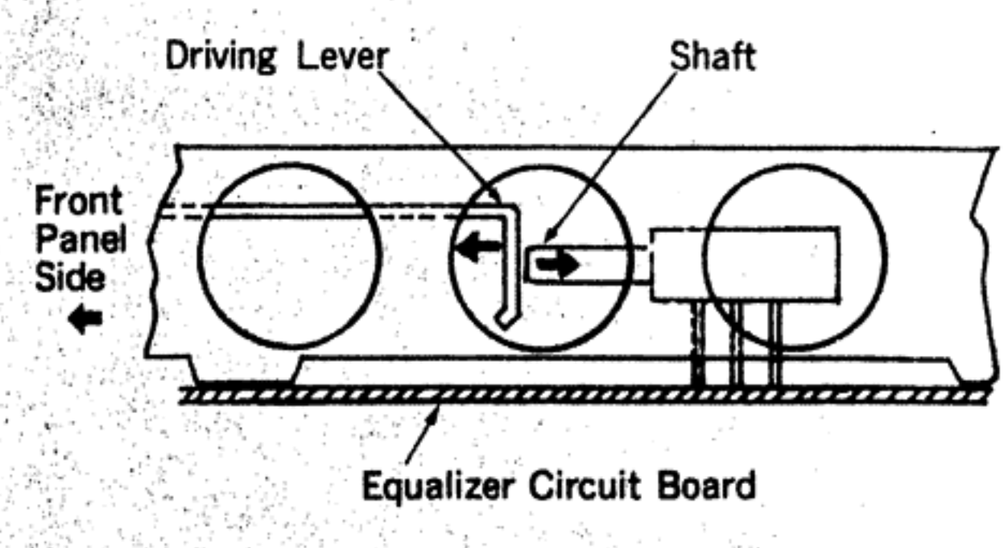

8. PACKING LIST

Parts No.	Stock No.	Description
1	91167910	Vinyl Cover
2	07641100	Styrofoam Packing
3	07596200	Carton Case

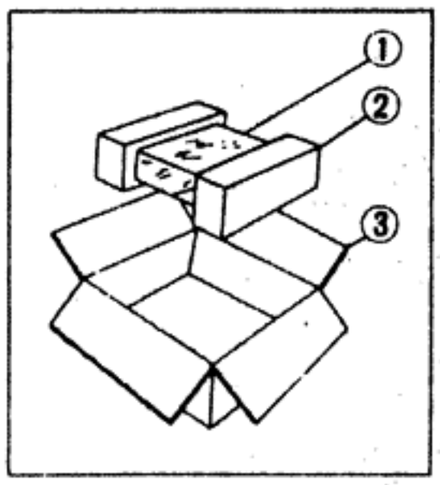

9. ACCESSORY PARTS LIST

Stock No.	Description
07643800	Operating Instruction

Sansui

SANSUI ELECTRIC COMPANY LTD.: 14-1, Izumi 2-chome, Suginami-ku, Tokyo 168 Japan PHONE:(03) 323-1111/TELEX:232-2076
SANSUI ELECTRONICS CORPORATION: 1250 Valley Brook Ave. Lyndhurst, N.J. 07071 U.S.A.
333 West Alondra Blvd. Gardena, California 90247 U.S.A.
3036 Koapaka St. Honolulu, Hawaii 96819 U.S.A.
SANSUI ELECTRONICS (U.K.) LTD.: Unit 10A, Lyon Industrial Estate, Rockware Avenue, Greenford, Middx UB6, OAA, England
SANSUI ELECTRONICS G.M.B.H.: Arabella center, 6 Frankfurt AM Main, Lyoner Strasse 44-48, West Germany

(SM1-02) Printed in Japan (210530M) <36455000>